Electroencephalography and Clinical Neurophysiology, 1979, 47: 738—741

A PULSED INTEGRATOR FOR EMG ANALYSIS

M.J. BAK and G.E. LOEB

Laboratory of Neural Control, IRP, National Institute of Neurological and Communicative Disorders and Stroke, National Institutes of Health, Bethesda, Md. 20014 (U.S.A.)

(Accepted for publication: March 14, 1979)

In analyzing electromyographic records, it is frequently desirable to process electronically the wideband recorded data to improve the visual perception of the signal envelope and to facilitate quantitative measurements of signal amplitude and timing. Full-wave rectification is often combined with simple RC filtering to smooth the profile and reduce the biasing of the apparent response by large, fast units which happen to lie close to the electrodes. However, the shallow roll-off of such filters makes a significant degree of integration impossible without severely degrading the sharpness of the onset, often an important factor in the analysis.

Gottlieb and Agarwal (1970) introduced the 3-pole Paynter filter to EMG analysis, which significantly improved the envelope response. However, in the study of reflexly introduced perturbations in EMG pattern, the ability to delineate and quantify individual reflex components with separations of 15—20 msec is important. The Paynter filter has a slow decay time so that the response components become dominated by the first transient, and therefore it does not adequately reproduce the signal dynamics. Also, because of the large number of filter components in the 3-pole design, it is cumbersome to have selectable time constants to allow adjustment of the response.

The various components of reflexes tend to be stereotyped in their timing but independent in amplitude. It is frequently desirable to assign a quantitative evaluation to the total EMG activity recorded in each of several post-stimulus time windows. We here describe a pulsed integration circuit which provides a voltage proportional to the area under the rectified EMG curve in discrete time windows. This output is suitable for on-line sampling by a digital computer without the need for high speed data collection or peak analysis usually required to handle such data.

Circuit description

The circuit (see Fig. 1 block diagram) divides the rectified EMG signal into independent bins by resetting a long time constant integrator at the desired rate and outputting its previous voltage peak during each subsequent integration period. (An automatically reset true integrator was recently described by Davies and Wise (1978) for a different application.)

The EMG signal is assumed to have already been buffered and amplified to a 1—2 V peak-to-peak level. The signal is capacitively coupled through C_1 and then full-wave rectified to produce the absolute value of the signal. The full-wave rectifier circuit employs two unity gain inverting amplifiers hooked in series and biased by diodes at their non-inverting inputs (see Fig. 1). A F.E.T. operational amplifier (Burr Brown 3522J) is used for the integrator circuit. R_3 is a trim potentiometer which must be adjusted so that the signal from the full-wave rectifier is biased slightly above zero volts in order to effect the maximum dynamic range of A_1.

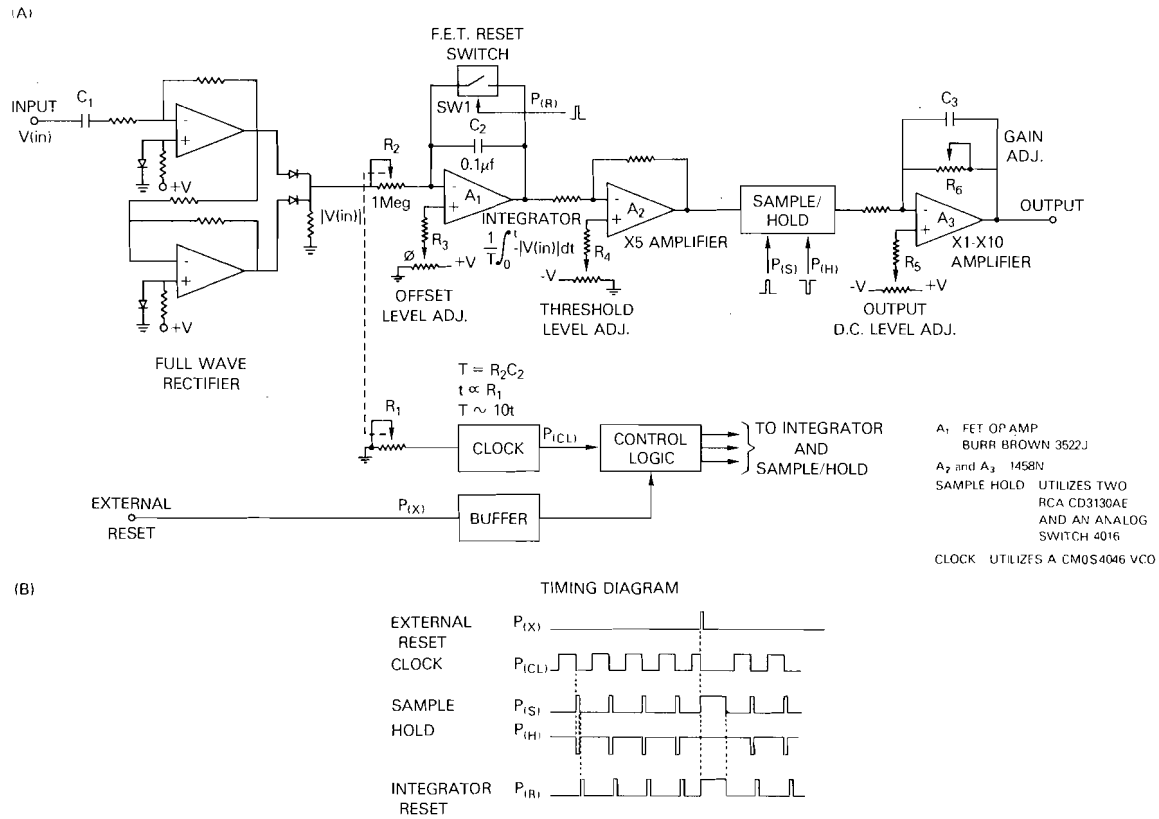

Fig. 1. (A) Block diagram of digital integrator circuit. (B) Timing diagram showing relative occurrences of sample/hold, reset and clock pulses.

The integration time constant, T, is equal to R_2C_2 where R_2 is a potentiometer which is mechanically ganged to R_1. Potentiometer R_1 sets the clock frequency which determines the relative switching times for the sample/hold and reset periods. By simultaneously adjusting the integration time constant T and switching period t, the integrator output amplitude remains fairly constant for the same input over the entire clocking range. Hold periods of between 1 and 10 msec have proven to be the most useful, thus requiring a clock frequency between 100 Hz and 1 kHz; T ranges from 10 to 100 msec to assure complete integration. F.E.T. switch SW_1 across C_2 resets the integrator to zero at the end of each hold period on command from the control logic.

The output of the integrator will appear as a series of ramps occurring with a periodicity equal to the clock frequency and amplitudes proportional to the area under the rectified EMG waveform during the sample period, i.e.:

$$Vo = \frac{1}{T}\int_0^t -|V_{(in)}|d(t)$$

The output signal from A_1 is then amplified and inverted by operational amplifier A_2. Potentiometer R_4 adjusts the output bias level of A_2 so that the signal can be set to below zero volts. Since the sample/hold circuit operates from a single positive supply voltage, any input signal to it which goes below zero volts will be clipped and thus not included in the sample/hold process. Hence potentiometer R_4 acts as a threshold level adjustment which will

effectively cancel out any signal smaller than desired. This feature is especially useful for eliminating base line noise. The sample/hold circuit will store the output level of A_2 just before the integrator is reset and will hold this value until the next integrator reset pulse occurs. The control logic, which is basically a series of one shots, determines the proper sequencing of pulses for the integrator reset and sample and hold phases of operation. An external input for a reset pulse is provided to allow synchronizing the integrator to external devices such as a stimulator.

The output of the sample/hold circuit is buffered by operational amplifier A_3 which also provides a means for scaling the output amplitude by adjusting R_6. Potentiometer R_5 allows the output to be adjusted above or below zero volts in order to achieve optimum biasing for various recording and computational devices. Capacitor C_3 provides low pass filtering in order to suppress switching transients which are an inherent artifact of the sample/hold circuit.

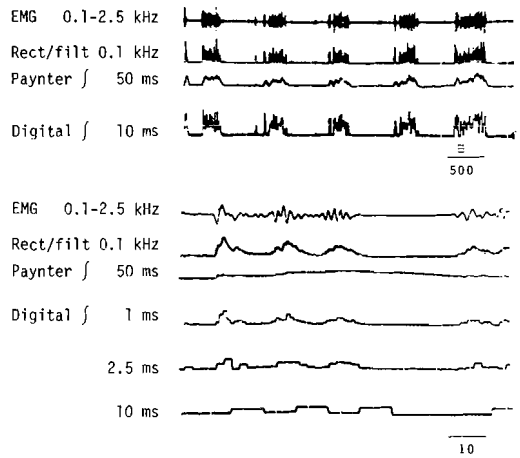

Fig. 2. Various methods of processing EMG data recorded from implanted bipolar electrodes in the medial gastrocnemius muscle of a freely walking cat. Top group shows five step cycles of the raw EMG and its processing by a full-wave rectifier and RC filter (0.1 kHz high cutoff 3 dB point), a Paynter filter (50 msec time constant) and the pulsed integrator (set at 10 msec bin width). The portion of the top trace marked with the dashed lines over the time scale (msec) is expanded 50× below the show the reflex response components to a single electrical shock delivered at this point in the step cycle. Three different pulsed integrator bin settings are shown.

Circuit performance

Fig. 2 compares the response of the digital integrator to that of RC and Paynter analog filters. At slow sweeps, the 10 msec bin width produces an output which combines both the low-frequency envelope output of the Paynter filter with preservation of the rapid modulation apparent in the RC filter. The faster sweep below shows that this same bin width captures the essential quality of the three-component reflex and post-reflex inhibition and provides a single voltage level for each component which is proportional to its integrated area. The falling response of the Paynter filter is much too slow to separate the components. The RC filter, which cannot be slowed appreciably without blurring the intervals between the peaks, produces a large range of amplitudes during each peak and the response sampled at any particular instant will be highly biased by slight fluctuations in the timing of the individual EMG spikes. The pulsed integrator is readily swept through a variety of bin widths and synchronization points to optimize the degree of integration and positioning of the windows. At longer integration times, the integrator's output delay of one bin width can be compensated in illustrations by delaying the comparison traces through an analog delay line set to the same period (Bak and Schmidt 1976). Because of the pulsed nature of the circuit, this phase delay is precisely and immediately known.

Summary

A novel device is described which converts EMG signals to an output which is proportional to the area under the rectified curve in dis-

crete time intervals. This is achieved by resetting a long time constant integrator at the desired rate and saving each integral in a sample/hold circuit for output during the subsequent integration period. This output is particularly useful for quantifying fast reflex events since the signal is integrated without leakage in each period and leaves no residual signal in subsequent periods.

Résumé

Générateur à impulsions pour EMG

Les auteurs décrivent un système nouveau qui convertit les signaux EMG en une sortie proportionnelle à la surface limitée par la courbe redressée à des intervalles de temps discrets. Ceci est réalisé en remettant à zéro un intégrateur à longue constante de temps à la cadence désirée, et en conservant chaque intégrale dans un échantillonneur/bloqueur en vue d'une sortie qui s'effectue pendant la période d'intégration consécutive.

Cette sortie est particulièrement utile pour quantifier les évènements réflexes rapides puisque le signal est intégré sans perte durant chaque période et qu'il ne laisse aucun signal résiduel lors des périodes suivantes.

References

Bak, M.J. and Schmidt, E.M. An analog delay circuit for on-line visual confirmation of discriminated neuroelectric signals. IEEE Trans. Bio-Med. Engng, 1976, 24: 69—71.

Davies, A. and Wise, J.C.M. True integrator with automatic reset. Med. biol. Engng Comput., 1978, 16: 573—576.

Gottlieb, G.L. and Agarwal, G.C. Filtering of electromyographic signals. Amer. J. physiol. Med., 1970, 49: 142—146.